Rise Stand SKU: TCDP04, TCDP04W, TCDP01, TCDP01W

Assembly Instructions

COMPULOCKS

1

COUNTER MOUNTING PATTERN

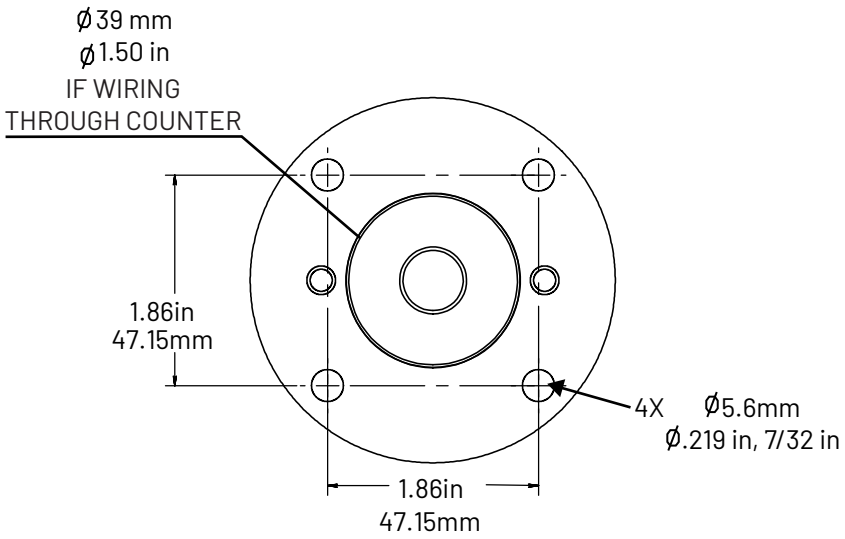

SCREW BOTTOM PLATE TO THE COUNTER
USING #14 X 1½" PHILLIPS PAN HEAD
SHEET METAL SCREWS (PROVIDED)

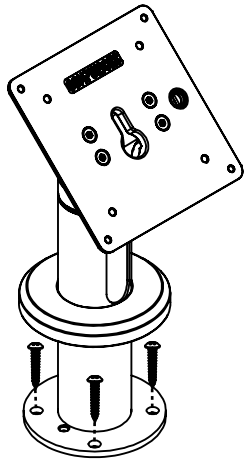

2

ROUTE CHARGING CABLE
THROUGH THE STAND AS SHOWN

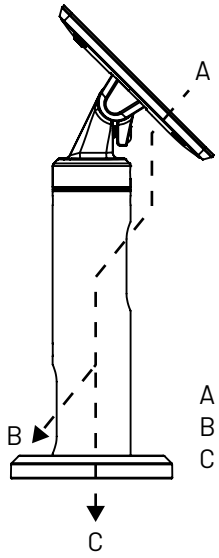

A - INLET
B - BACK SHAFT EXIT
C - BASE EXIT

3

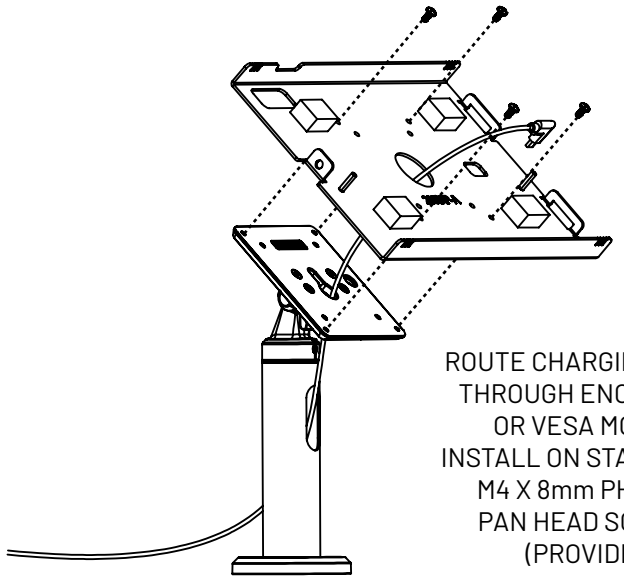

ROUTE CHARGING CABLE
THROUGH ENCLOSURE
OR VESA MOUNT.
INSTALL ON STAND USING
M4 X 8mm PHILLIPS
PAN HEAD SCREWS
(PROVIDED)

©Compulocks Brands Inc. All Rights Reserved

4

ATTACH CHARGING CABLE TO
THE TABLET, LEAVE A SMALL LOOP
OF CABLE BENEATH THE TABLET

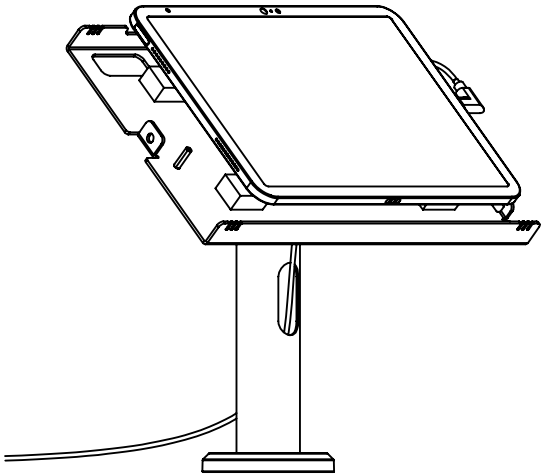

5

INSTALL THE ENCLOSURE TOP PLATE/VESA
MOUNT PER THEIR INSTRUCTIONS

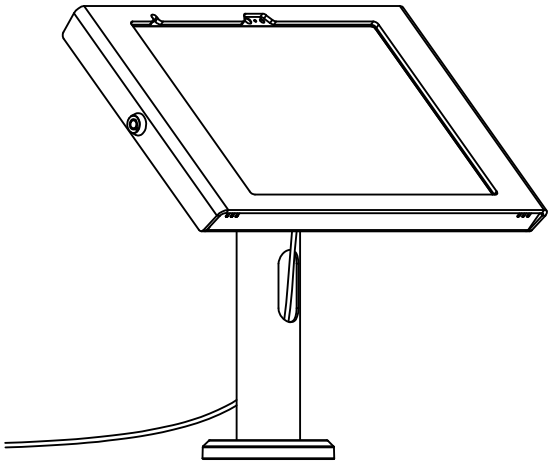

Tilt Tension Adjustments

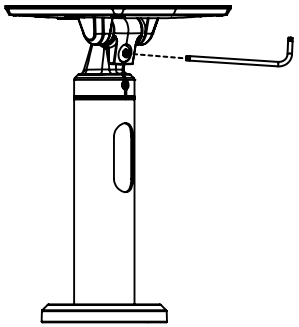

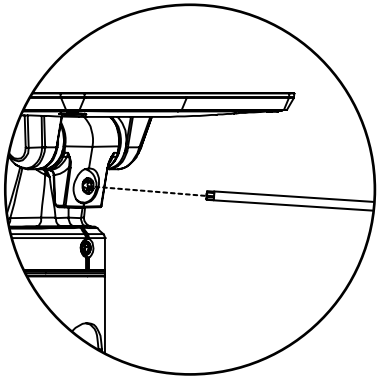

ADJUST HINGE TENSION
USING WRENCH (PROVIDED)

IN THE BOX

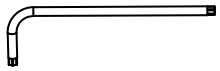

T30 TORX L-Wrench



M4 X 8mm
Philips Pan Head Screws



#14 X 1½"
Phillips Pan Head Sheet Metal Screws

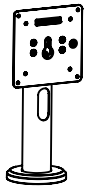

Rise Pole Stand

©Compulocks Brands Inc. All Rights Reserved